Technical Service Manual

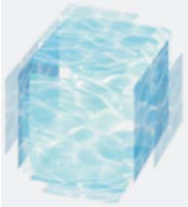

Dishwasher

Contents

Specification	2
Function Description	3-4
Water circuit	3-4
Theory of parts	5-23
Location	5
PCB	6-7
Inlet valve	8-10
Drain pump	11-12
Heater	13-14
Washing pump	15-16
Pressure switch	17
NTC	18-19
Flowmeter	20-21
Safety Hose	22-23
Test program	24
Procedure	25
Error code	26-28
Inspection	29-33
Troubleshooting	34-38

SAFETY NOTICE

This documentation is only intended for qualified technicians who are aware of the respective safety regulations.

Models:WQP12-B9227E

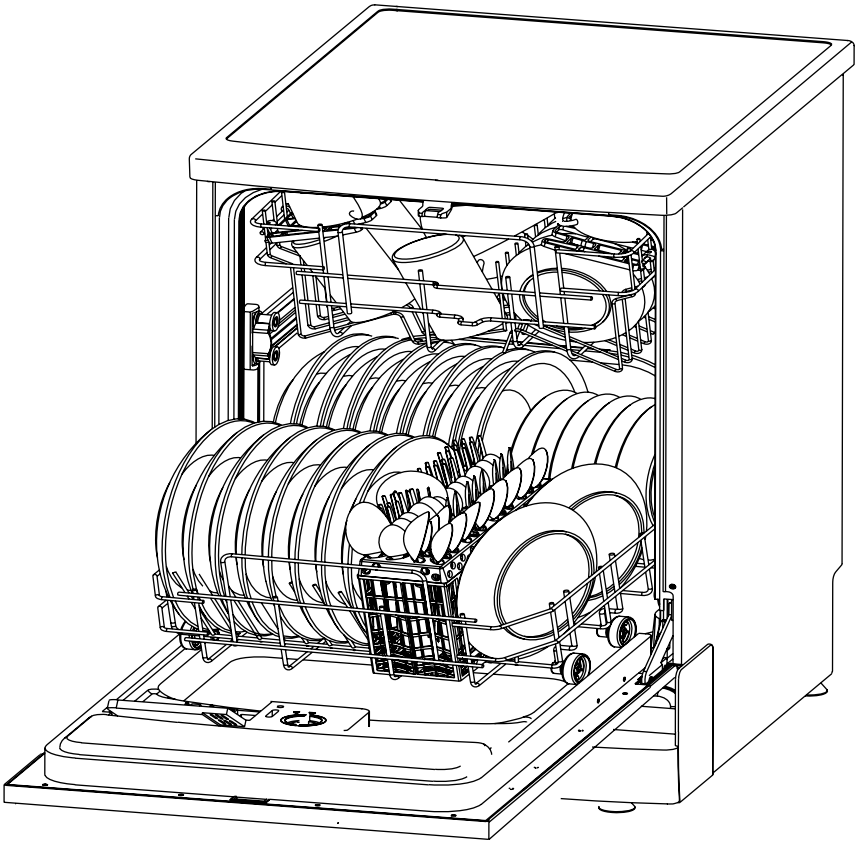

Electrical supply	220-240V, 50Hz
Supply water pressure	0.04MPa-1.0MPa
Supply water temperature	below 60℃

For the basic operation instructions, please refer to the instruction manual attached with each unit.

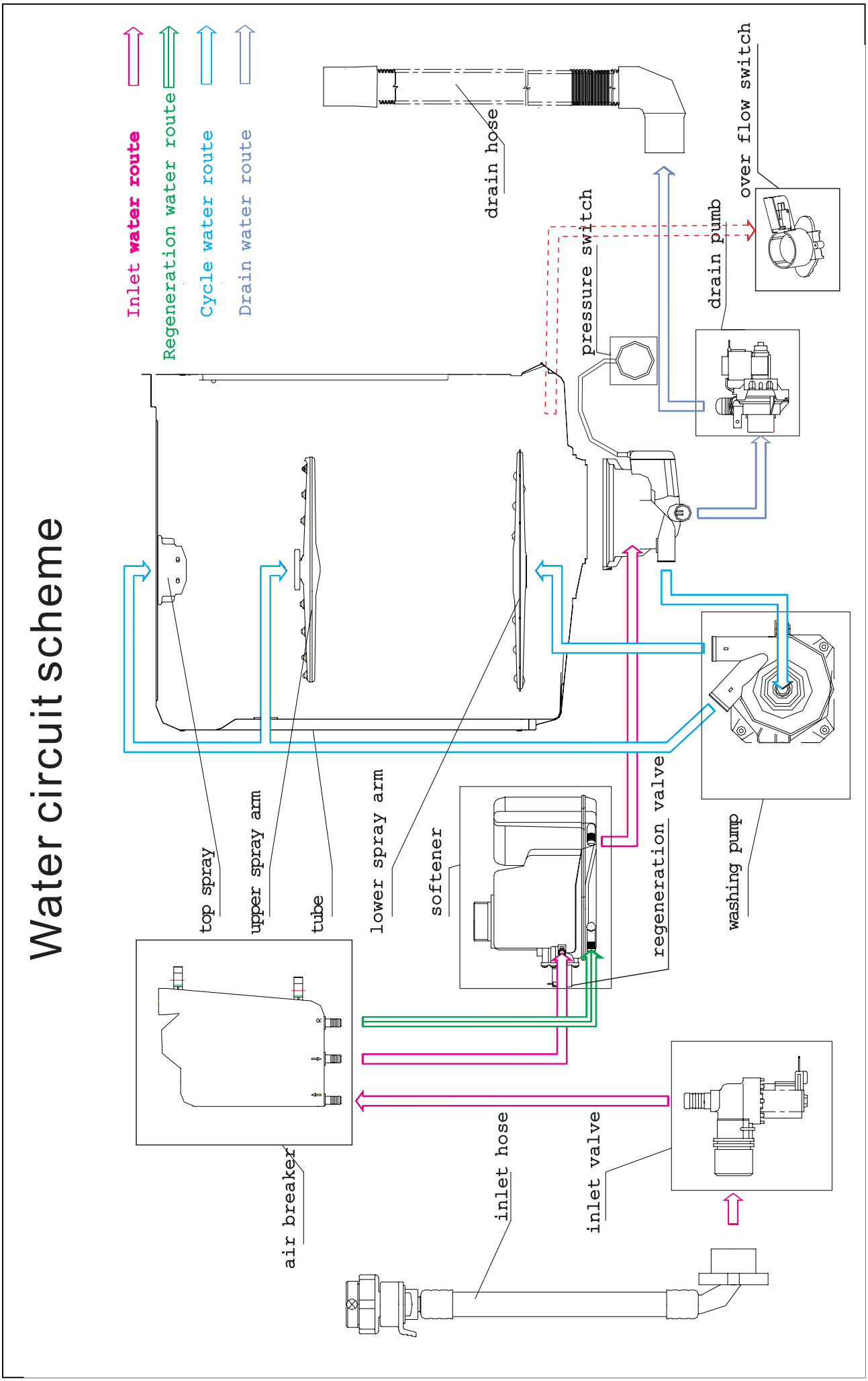
Water circuit scheme
Inlet water route
Regeneration water route
Cycle water route
Drain water route
drain hose
over flow switch
pressure switch
drain pumb
top spray
upper spray arm
tube
lower spray arm
softener
regeneration valve
washing pump
air breaker
inlet hose
inlet valve

Process of water inlet (indicated by magenta route)

In this process, regeneration water route is cut off, main water route is open. The water in the main water route is softened when pass through the softener, and then enter in the tub. During this phase, some of inlet water will be stored in the air breaker to be regenerating water.

Process of cycle washing (indicated by blue route)

Cycle washing action is driven by washing pump motor. Water can obtain the power during it passing through the working washing pump, then be pumped into spray arm, pass from spray arm nozzles, over the dishes, into sump ,where connect to washing pump, and to get in the next water cycle.

Process of regeneration (indicated by green route)

Regeneration valve is open, the regenerating water dissolve salt in the salt chamber of softener, and then enter in the resin tank to reactivate the resin.

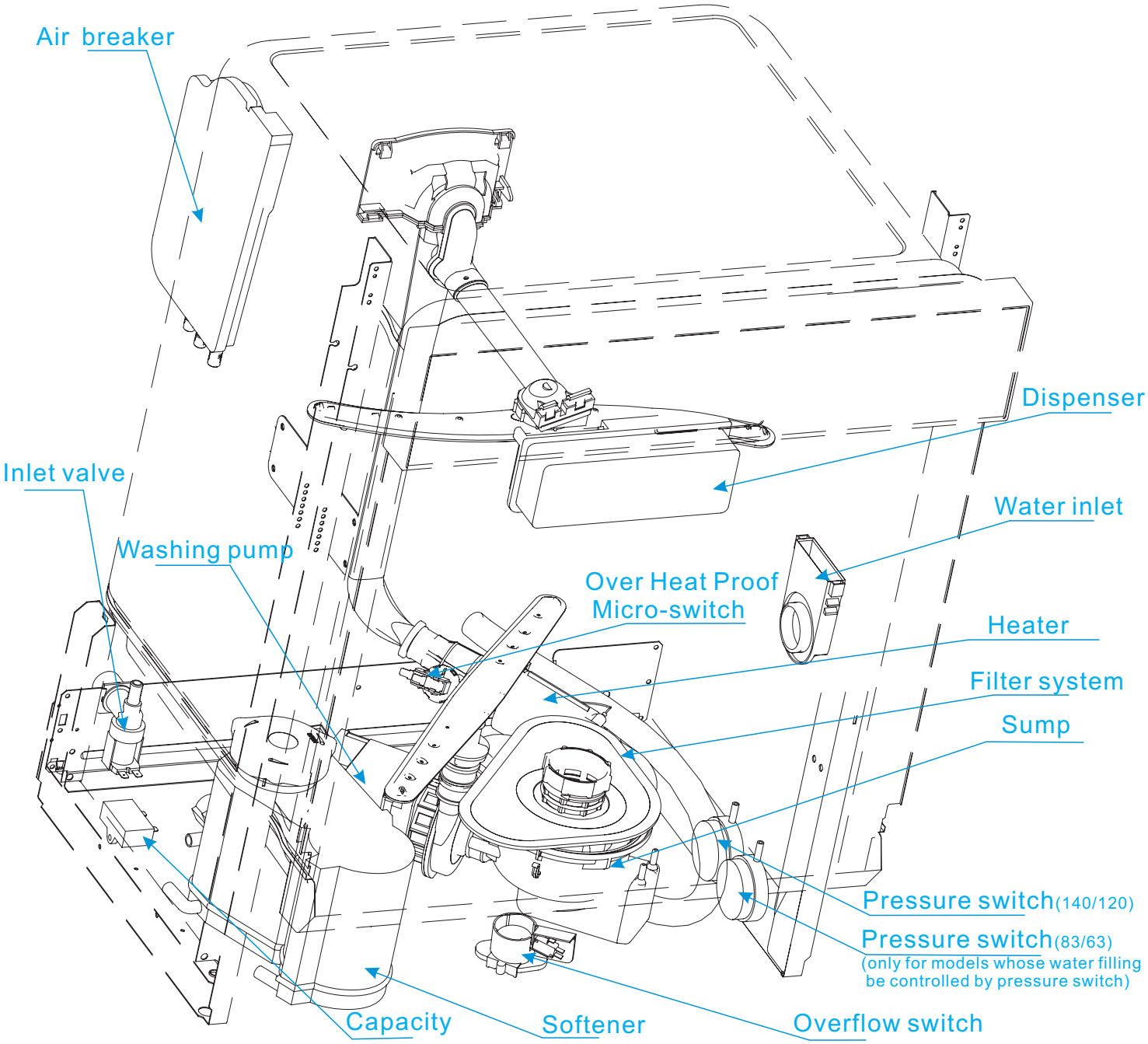

Please Note: Exploded view and part list of each model have some different visions, so please refer to newest vision Midea sent you.

PCB

Printed Circuit Board is the control center of dishwasher, which receive and process signal from components, send order to components and deal with the feedback information, etc.

Access PCB

Removing the control panel

The control panel can be removed from dishwasher door.
1. Remove the six screws securing the control panel to the door.
2. The control panel will drop down and be free of the door. But, the wiring will still connected to the control panel.

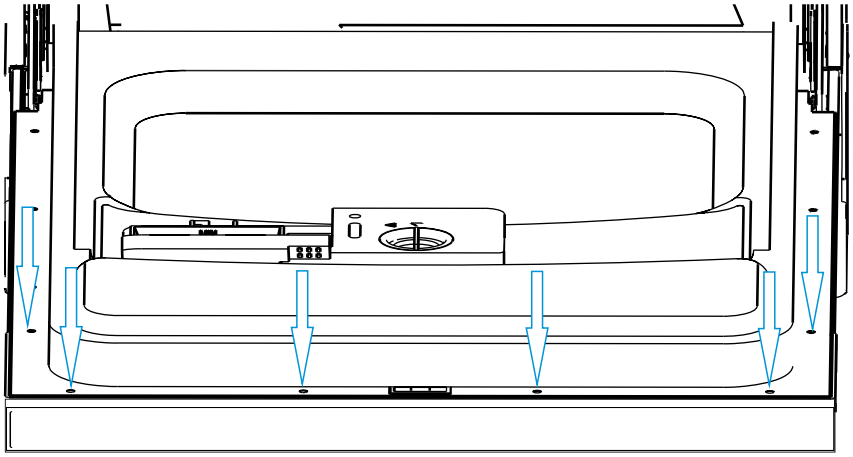

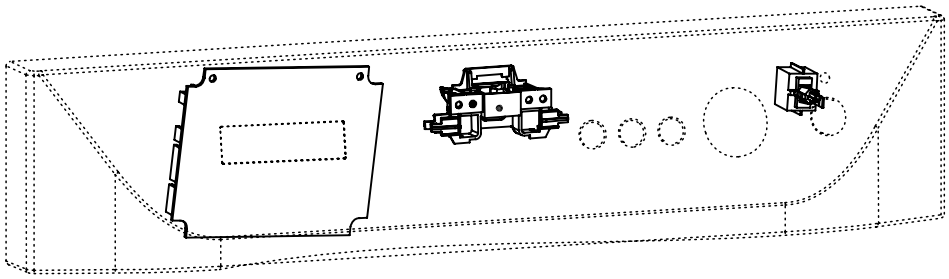

Note: For the majority of models, the PCB is located behind the control panel. The minority of models locate the PCB on the side of strengthening muscle. You can judge the location by the newest exploded view Midea sent you.

3. Disconnect the connector form PCB.
4. Remove the screws securing the PCB to control panel.
5. Remove the PCB.
6. Reverse the above procedure to install.

Map of PCB

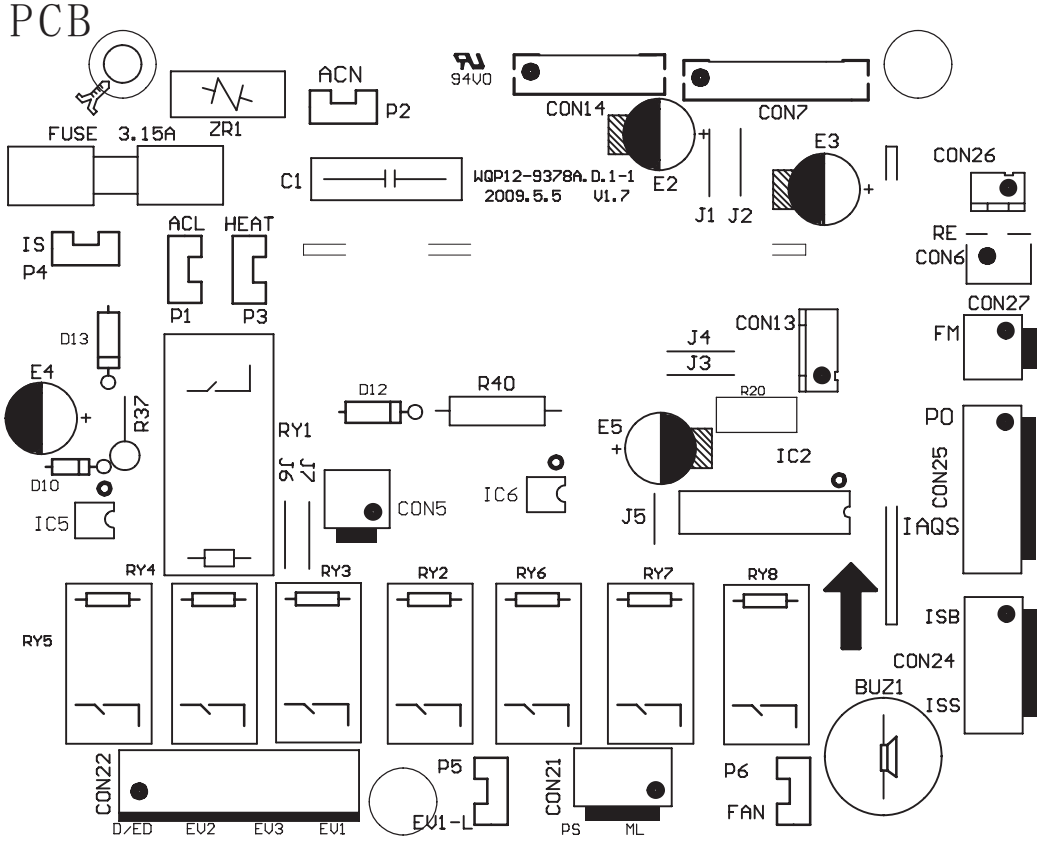

Note: This map is applies to 9378A model.

Description

Mark	Function
HEAT	Output for Heating Element
ACL	Input of live wire
ACN	Input of bull line
IS	Input of Door Switch
EV1-L	Firewire input of inlet valve
RE	Thermister
ML	Washing Pump
PS	Drain Pump
D/ED	Dispenser
EV1	Inlet valve
EV2	Softener
EV3	Halfload Valve
ISS	Salt detect
ISB	Rinse detect
IAQS	Overflow detect
FM	Flowmeter
FAN	Fan

There is small pole's location difference between different models.
But the marks on PCB have the same meaning described on the left side.

Location of inlet valve

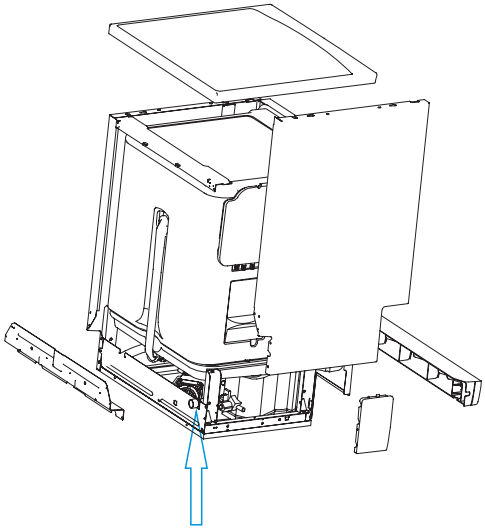

Appearance

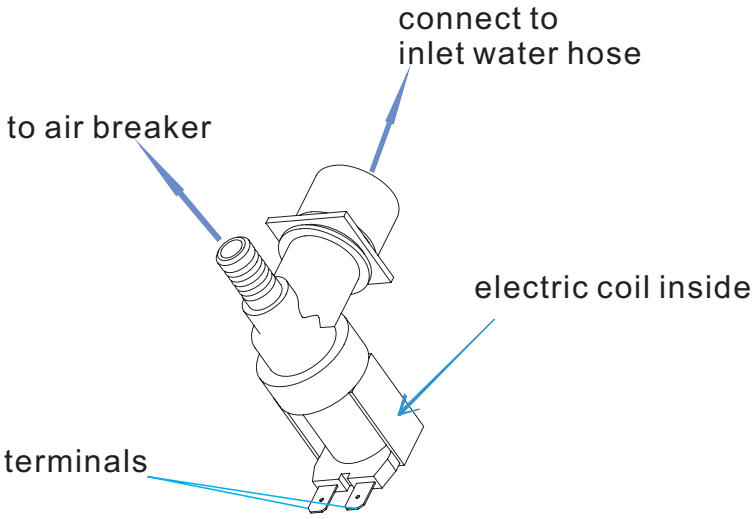

The work principle

The inlet valve is electromagnetic valve that decide whether water enter or not. Valves are normally closed. Each time the appliance requires water, the controller will convey an electric signal to the coils to open the valves.
The inlet valve consist of electric coil, valve body, valve pole, filter etc.
In a word, the electromagnetic valve can act to allow water enter into machine, when it receive the order given by controller.

The defeat point

1. The valve coil is broken, so the valve can't open. It will cause the E1 error.
2. The filter is jammed, so water can't enter. It will cause the E1 error.
3. The connector is loose, so the valve can't open. It will cause the E1 error.
4. The valve pole is rusted or locked by dreg, so the valve can't open or close. It will cause the E1 or E4 error.

Technical data

Nominal voltage	220-240VAC
Frequency	50/60Hz
Resistance	Approx:3.4 - 4.3kΩ
Work duty	100%ED T25 3min/5min T60
Flux	4L/min ±15%
Power	6W
Work Pressure	0.04 - 1MPa

Access inlet valve

1. Disconnect power.
2. Remove the water inlet hose. (Note : Be careful of remain water drop.)
3. Remove the baseboard, left baseboard, top panel, left side panel and middle rear crosspiece.

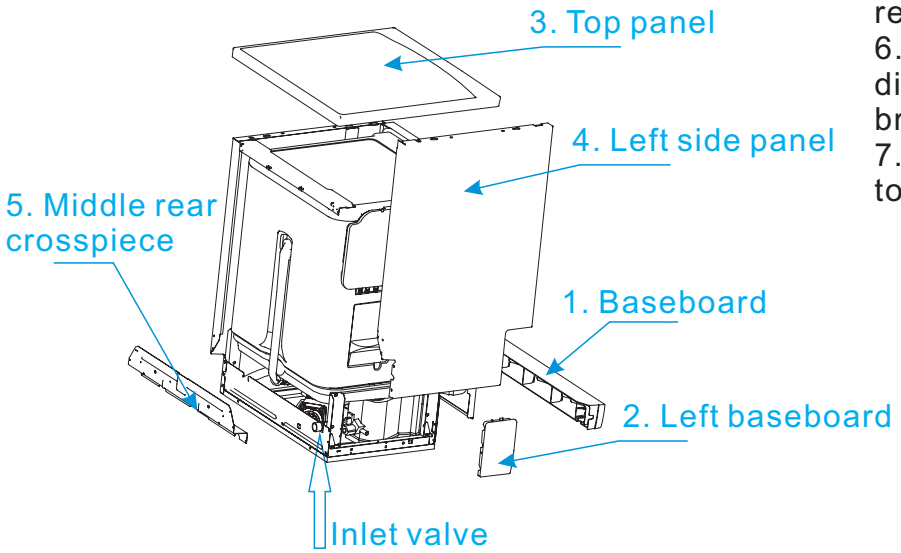

4. Disconnect the 2 terminal lugs from the inlet valve.
5. Push the valve from the lower rear crosspiece to take it off.
6. Remove the clamp and disconnect the inlet hose (to air breaker) from the water valve.
7. Reverse the above procedure to install.

Attention: Build in models have no Baseboard and left and right baseboard, but adjustable baseboard.

Inspect inlet valve

Check electric part

1.Open the control panel and take out the PCB;
2.Unplug the CON3 and P4 wires , then use the multi-meter Ω shelf to measure resistance between the blue wire (EV1) and white wire (IS), the normal resistance is about 3.4KΩ to 4.3KΩ.
3. I f the measured resistance is not correct, it means the valve coil is broken or the connector is loose. In this case, we should check the connection first. If the problem hasn't been solved by re-connection, we should replace the valve..
4.If the resistance is OK, we need to inspect the valve body.

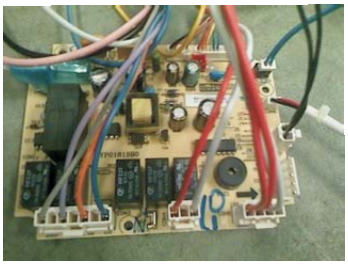

unplug

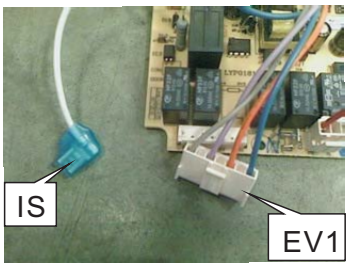

Check machine part

1. If the electric part is OK, we need to check the machine part.
2. Remove the baseboard, left baseboard, top panel, left side panel and middle rear crosspiece.
3. Check the valve filter. if the valve filter is blocked, we need clear the residues.
4. If the valve filter is clear and the valve can't inlet water, check whether valve can act or not. If it isn't , we need replace the valve.
5. If the water is continue entering, we need replace the valve.

Location of Drain Pump

Bottom View

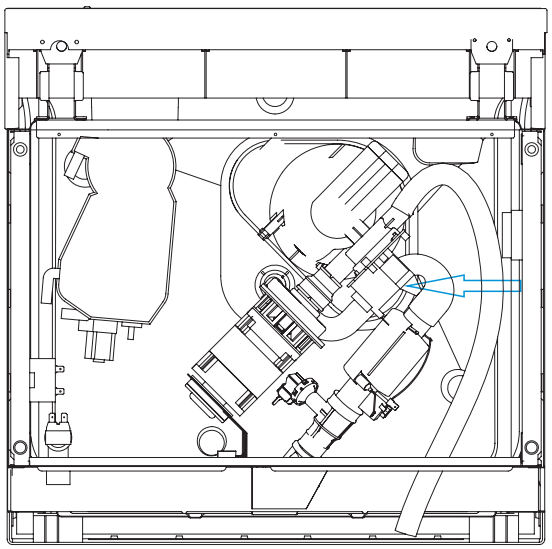

The work principle

Drain pump integrated into sump

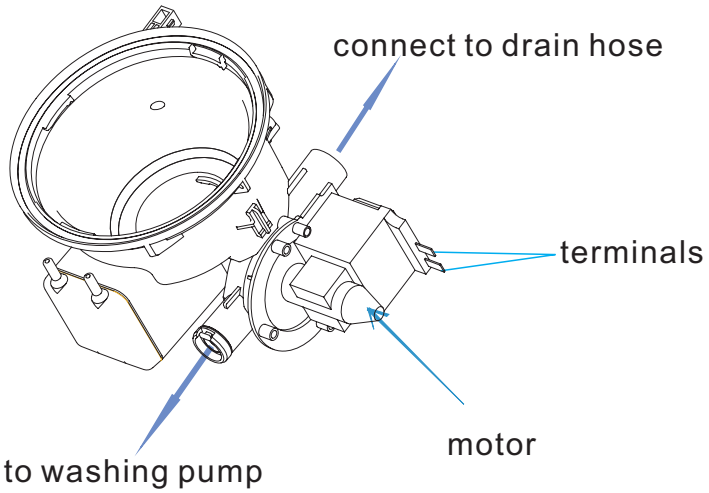

The work principle

Drain pump consists of electrical motor, impeller, inlet and outlet.
Drain pump is a kind of pump driven by permanent magnet synchronous motor. The rotor is made with permanent magnet material, the running inertia of rotor is very small, the stator consist of silicon steel stack and coil. When the drain pump is on power, the rotor will be very easy to start.

The defeat point

1. The motor coil is broken, so the drain pump can't work. It will cause the E2 , E4 or E1 error .
2. The magnetism of motor rotor is weak, so drain pump cannot work. It will cause the E2, E4 or E1 error .
3. The connector is loose, so the drain pump can't work. It will cause the E2, E4 or E1 error .
4. The rotor is locked by residues, so the drain can't work . It will cause the E2, E4 or E1 error .
5.The drain pump assembly rack is loose, it will cause noise.
6.The non-return valve is bad, the remain water is too much.
Explanatory notes: failure of drain pump may cause E1, becaus

Technical data

Nominal voltage	220-240VAC
Frequency	50Hz
Resistance	150 - 220Ω
Delivery height	1M
Delivery performance	≥17l/min(230VAC)

Access drain pump

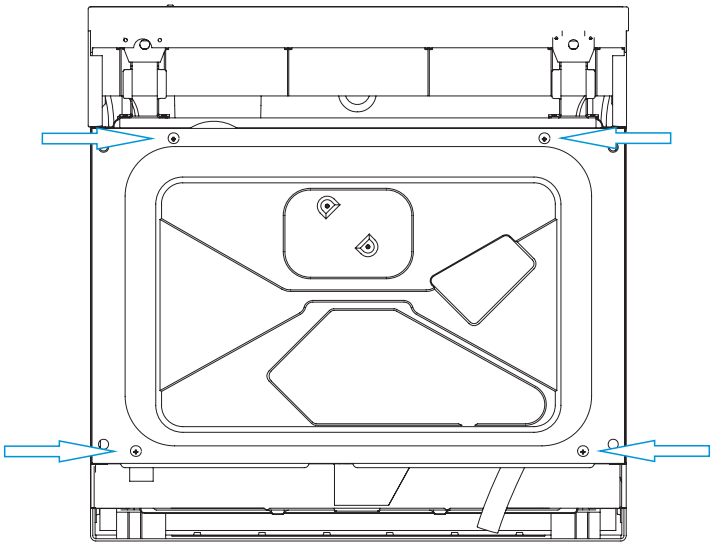

1. Drain off the water in the dishwasher, and disconnect the power supply。
(Note : Make sure to remove remained water in the dishwasher. If not, wet the floor.)
2. Remove four screws on bottom, and then remove bottom board.
3. Label and disconnect the two terminal lugs from the drain pump.
4. Remove screws securing the drain pump to sump, then remove drain pump.
5. Reverse the above procedure to install.

Inspect drain pump

Check the electric part

1.Open the control panel and take out the PCB;
2.Unplug the CON4 and P4 wires, then use the multi-meter Ω shelf to measure the red wire (PS) and white wire (IS), the normal resistance is about 150Ω to 220Ω.
3. If the measured resistance is not correct, it means the pump coil is broken or connector is loose. In this case, we should check the connection first. If the problem hasn't been solved by re-connection, we should replace the drain pump.
4.If the resistance is OK, but it also can't work, maybe the magnetism is too weak, so we need to replace the drain pump.

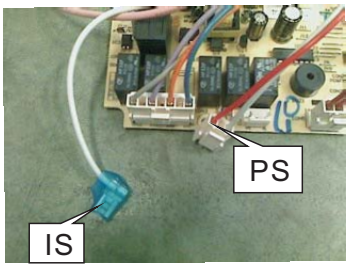

Check the machine part

1. If the electric part is OK, we need to check the machine part.
2. Remove bottom board.
3. If the non-return valve is wrongly assembled, the tub will remain much water. We need to re-assemble the non-return valve.
4. If the drain pump is working, but no water drain out or just a little. We should check the drain hose or drain body.

Location of Heater

Bottom View

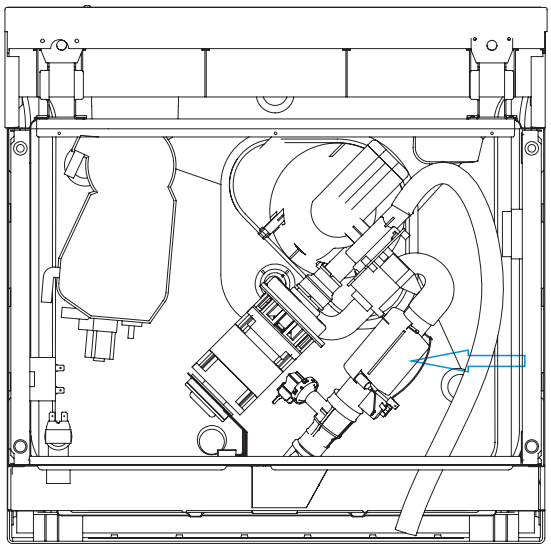

The work principle

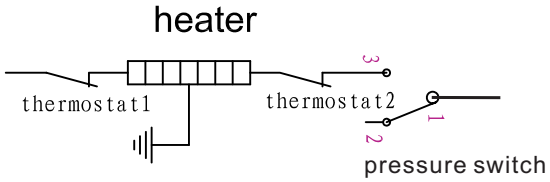

Technical data

Nominal voltage	230VAC
Rating power	1800W
Resistance	29.265±1.463Ω
Thermastat1	98℃
Thermastat2	229 ℃

The defeat point

1. The heater coil is broken, so the heater cannot work. It will cause the E3 error.
2. The thermostat is active, so the heater cannot work. It will cause the E3 error.
3. The connector is loose, so the heater cannot work. It will cause the E3 error.

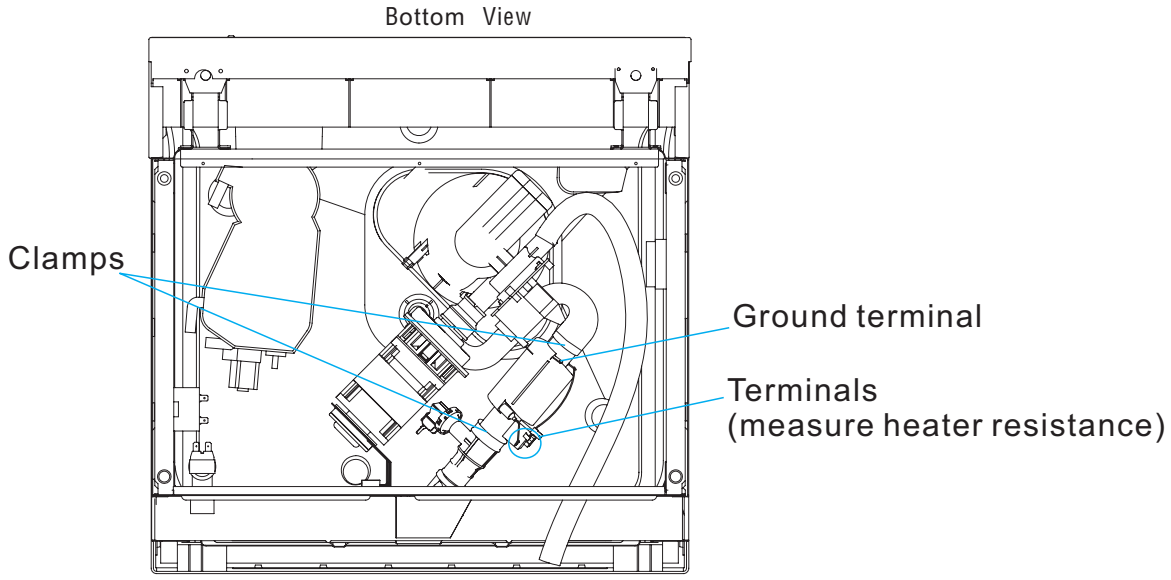

Access heater

1. Drain off the water in the dishwasher, and disconnect the power supply.
(Note : Make sure to remove remained water in the dishwasher. If not, wet the floor)
2. Remove bottom board.
3. Label and disconnect the terminals to and ground wire.
4. Remove the 2 clamps from the Heating element.
Caution: The clamp is easily damaged during removal and can't be reused. Replace the old clamp with a new universal clamp .
5. Reverse the above procedure to install.

Inspect heater

1. Remove bottom board.
2. Use the multi-meter Ω shelf to measure resistance between the two terminals shown in right picture, the resistance is about 29Ω to 31Ω.
3. If the measured resistance is not correct, it means the heater coil or the thermostat is broken, we should replace the heating element or the thermostat.

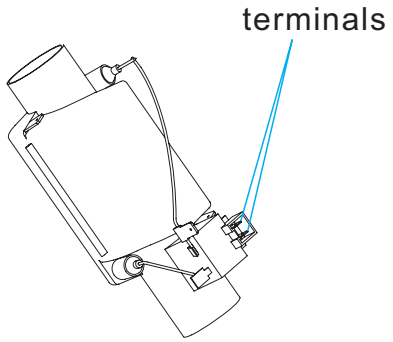

Location of Washing Pump

Bottom View

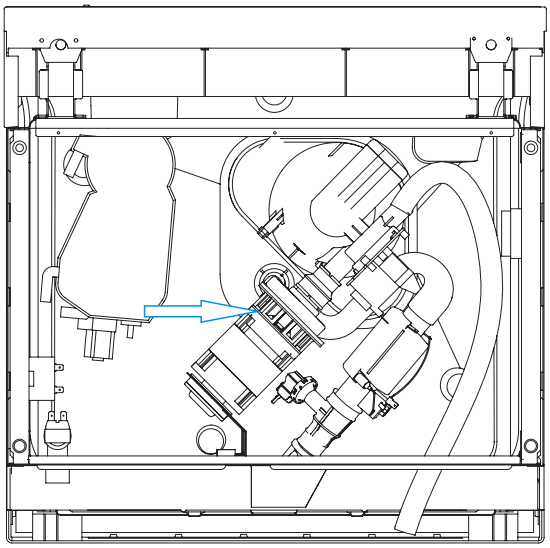

The work principle

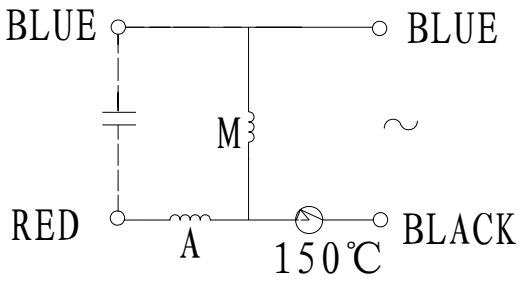

M-main coil
A-assistant coil

Washing pump is a kind of asynchronism motor with capacitor. The stator consist of silicon steel stack and two coils, main coil and assistant coil .

The defeat point

1. The motor coil is broken, so the wash pump can't work. It will cause E3 error.
2. The motor rotor capacitor is weaken, so washing pump can't start. In this case, it will send out the electromagnetism noise. If it is continue electrifying motor, the thermal protector will work. It will cause E3 error.
3. The connector is loose, the wash pump can't work. It will cause E3 error.
4. The rotor is locked by residues, so the wash pump can't work . It will cause the E3 error.
5. The drain pump assembly bracket is loose, it will cause noise.
6. If the machine hasn't been used for long time, there is a possibility the wash pump can't starting.

Technical data

Models / Items	YXW65-2B	YXW50-2
Nominal voltage	220-240VAC	220-240VAC
Frequency	50Hz	50Hz
Resistance	Main coil: 84.8±7%Ω	Main coil:93.10±7%Ω
	Assistant coil:78.6±7%Ω	Assistant:95.99±7%Ω
Delivery height	0.8m	1m(230VAC)
Delivery performance	≥50l/min(230VAC)	≥50l/min(230VAC)
Lock rotor current	≤1.50A	1.0±10%(230VAC)
Operating current	0.65A±10%	0.47±10%(230VAC)
Capacitor	5μF	3μF

Access Washing Pump

1. Disconnect power.
2. Remove bottom board.
3. Label and disconnect the 2 terminals to the capacitor.
4. Label and disconnect the 2 terminals to the motor wire connector.
5. Remove the clamp fastening the interconnect hose to the sump.

Caution: The clamp is easily damaged during removal and can't be reused. Replace the old clamp with a new universal clamp (Dia-31.0mm)

6. Remove the clamp fastening interconnect hose to the lower nozzle .
7. Remove the clamp fastening interconnect hose to heater.
8. Remove the screw and disconnect the ground wire from the wash pump motor assembly.

Note: Do not attempt to remove the bolt and locknut connecting the motor mount to the dishwasher frame.

9. Remove the motor pump assembly from the dishwasher.
10. Reverse the above procedure to install.

Inspect Washing Pump

Check the electric part

1.Open the control panel and take out PCB;
2.Unplug the CON4 and P4 wires, then use the multi-meter Ω shelf to test resistance between two white wire (ML and IS), the normal resistance is about 78Ω to 100 Ω.
3. I f the resistance is not correct, it means the pump coil is broken or the connector is loose, In this case, we should check the connection first. If the problem hasn't been solved by re-connection, we would replace the washing pump.
4.If the resistance is OK but it cannot work, it maybe the capacitor weakly, we need to replace the capacitor.

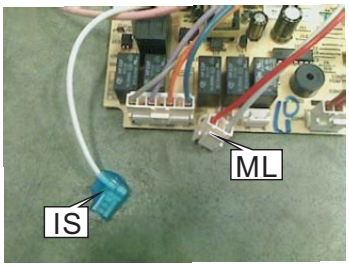

Check the machine part

1. If the electric part is OK, we need to check the machine part.
2. Remove bottom board.
3. Check the pump assembly, if the bracket is loose, it will bring the noise, we need to tighten it.
4. If the wash pump cannot start and the machine hasn't been used too long, maybe the seal element is bond.
5. If the drain pump is working, but no water out or just a little. We should check the vane wheel.

The work principle

The pressure switch consists of a moving diaphragm and disc which activate a change over contact. The contact can be calibrated to trip and reset at the desired pressure levels, The main application is to control the level of water in appliances. May also provide flood protection.

In our production, the pressure switch is to control the water level in appliance, like 83/63 serial. May also provide flood protection, like 140/120 serial.

Manufacturer:Elbi

1- COM

2 - NC

3 - NO

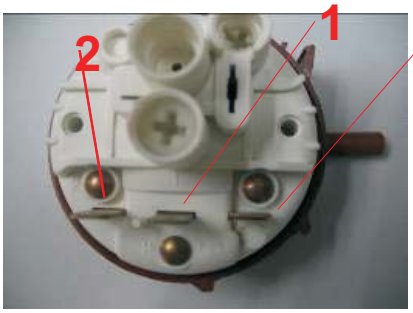

Front view

Back view

Manufacturer : EMZ

11 - COM

12 - NC

14 - NO

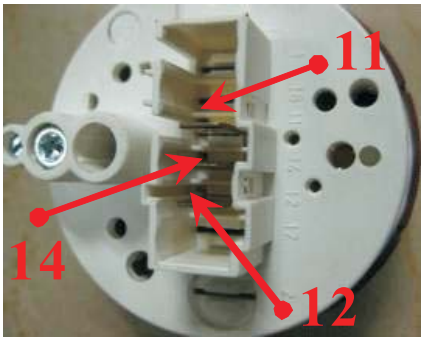

Front view

Back view

Location of NTC

Bottom View

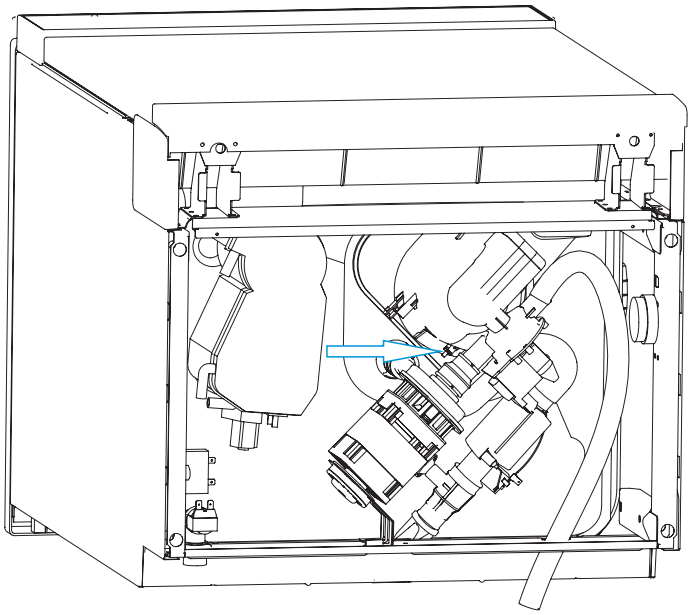

The work principle

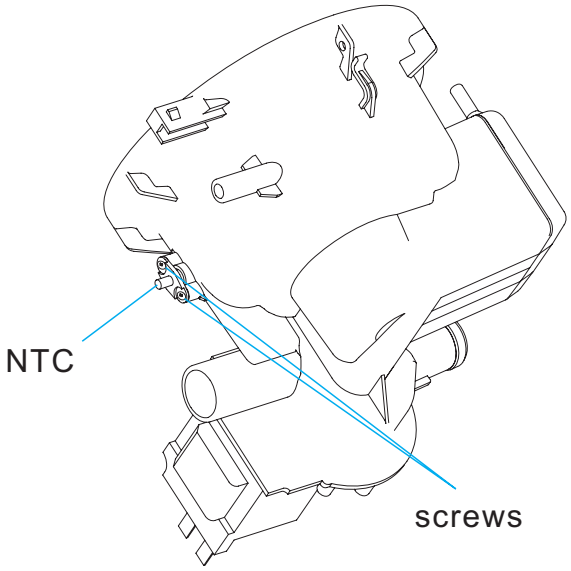

The work principle

Negative Temperature Coefficient Thermistor is integrated into sump, which is used for measuring temperature of water in the tub.

Access Washing Pump

1. Remove bottom board.
2. Remove two screws securing the NTC to sump(shown in above picture).
3. Take out NTC.
4. Reverse the above procedure to install.

Inspect NTC

1.Open the control panel and take out PCB;
2.Unplug the RE connector(shown in below picture), then use the multi-meter Ω shelf to test resistance between two blue wire , the normal resistance is shown in below table.
3. I f the resistance is not correct, it means NTC circuit has a problem. In this case, we should check the connection first. If the problem hasn't been solved by re-connection, we would replace the NTC.

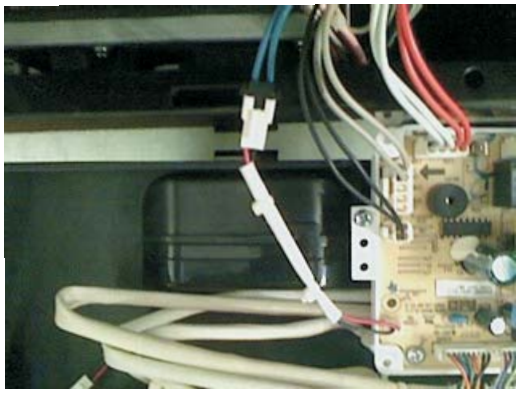

unplug

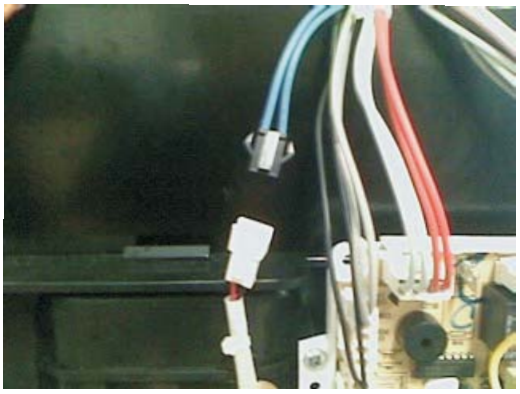

NTC resistance table

NTC	15℃	17.48KΩ
	20℃	12.12KΩ
	25℃	10KΩ
	30℃	8.299KΩ
	40℃	5.807KΩ
	50℃	4.144KΩ
	60℃	3.011KΩ
	70℃	2.224KΩ
	80℃	1.667KΩ
	85℃	1.451KΩ

Location of Flowmeter

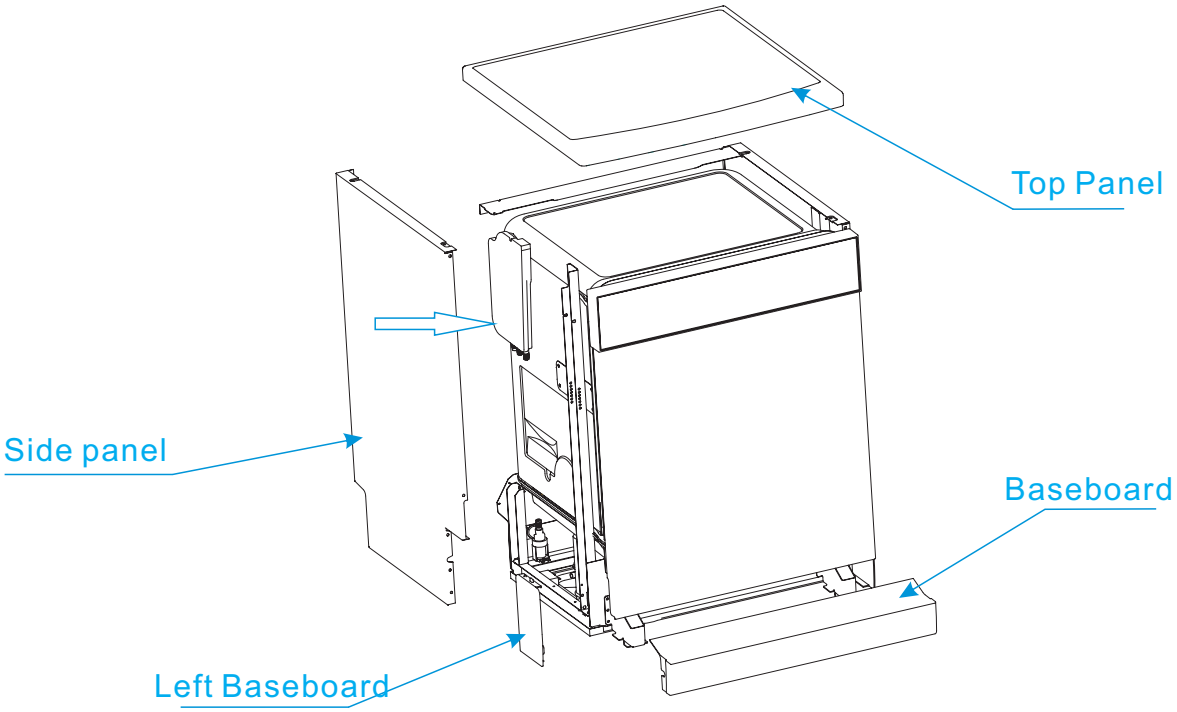

Attention: Build in models have no Baseboard and left and right baseboard, but adjustable baseboard.

The work principle

Flowmeter is integrated into Air Breaker. Function of Flowmwter is measure how much water has entered in appliance. it consists of impeller, tongue tube and terminal, etc.
When water pass through the flowmeter, moving water can rotate magnetic impeller, the tongue tube can sense the impeller's magnetic and send electronic pulses.

Access Flowmeter

1. Remove the baseboard, life baseboard, top panel and life side panel.
2. Remove the plastic nut inside tub, which secures the air breaker to tub.(Because flowmeter is integrated into air breaker, replace air breaker if flowmeter has failure.)
3. Disconnect the wire and remove clamp fastening hose to air breaker.
4. Take out air breaker.
5. Reverse the above procedure to install.

Inspect Flowmeter

1.Open the control panel and take out PCB;
2.Unplug the CON27 wire(shown in below picture), then use the multi-meter Diode shelf to test whether electrical pulse is sent out from two black wires while water is passing through flowmeter, or not.
3. If there is continual electrical pulse, the multi-meter will send out sound “de” continually.
4.if there is no electrical pulse, the multi-meter will not send sound. In this case, it means something wrong with flowmeter circuit. We should check the connection first. If the problem hasn’t been solved by re-connection, we should replace the air breaker..

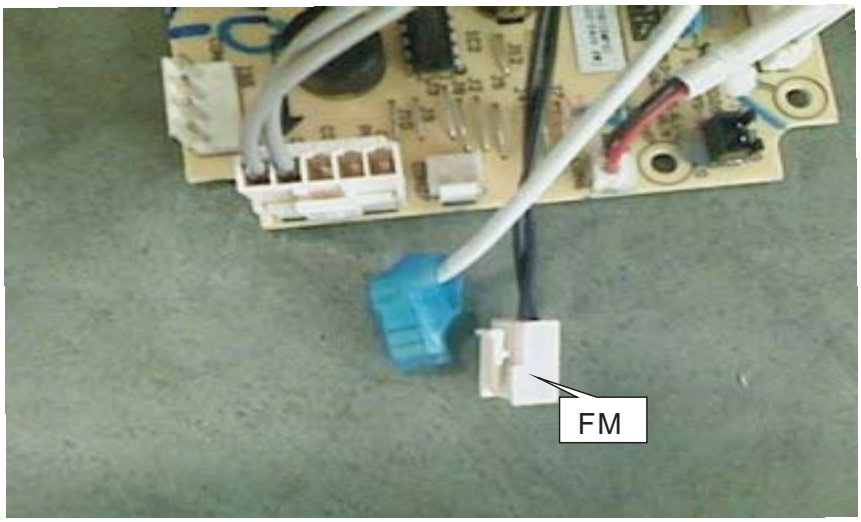

Location of Safety Hose

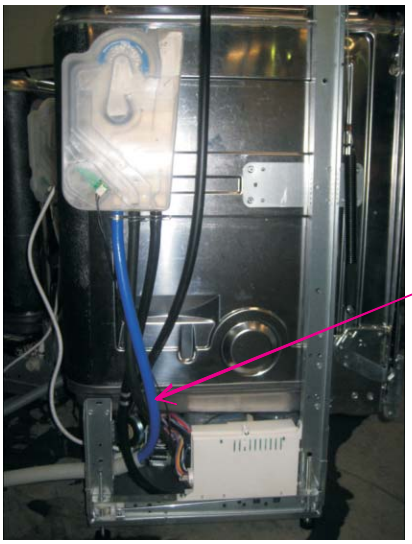

Electronic Aquastop Hose

Note: The assembly mode of mechanical Aquastop hose is the same as that of universal.

The work principle

Mechanical Aquastop Hose

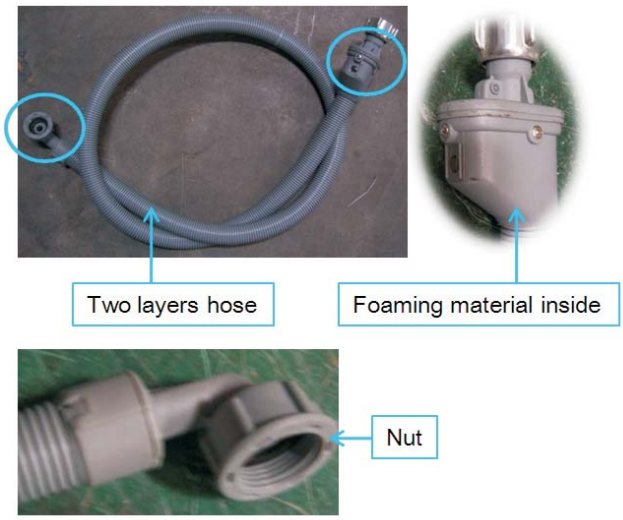

Electronic Aquastop Hose

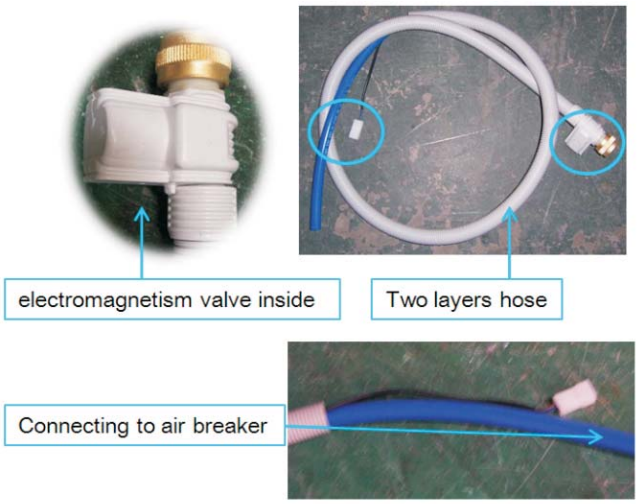

There are two types of Safety Hose, mechanical Aquastop hose and electronic Aquastop hose, which have different principles and assembly modes.

Mechanical Aquastop safety hose has two layers. If water leak and fill the air space between two layers, the foaming material will expand and lock the hose. In this situation, the machine might set off E1 alarm.

Electronic Aquastop safety hose also has two layers. But the difference from mechanical is that if the water leak and flow on the bottom tray, the flooding pressure switch on the tray will act, the electromagnetic valve on the hose will cut off the water road and the machine will set off E4 alarm.

Access Safety Hose

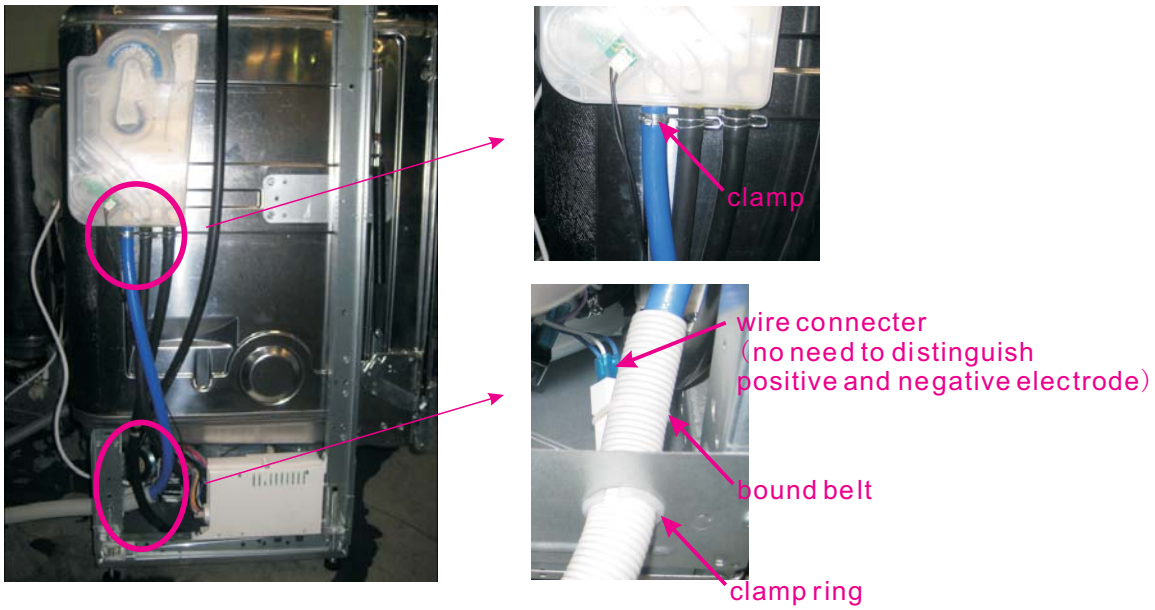

1. Remove baseboard, side baseboard, top panel and left side panel.
2. Remove clamp, cut the bound belt and disconnect the wire connector. Then the Inlet hose cane pulled out.
3. Reverse the above procedure to assemble.

Mechanical Aquastop Hose

Mechanical Aquastop hose is connected to appliance just as universal water inlet hose.

Inspect Safety Hose

Electronic Aquastop Hose

1.Open the control panel and take out the PCB;
2.Unplug the CON3 and P4 wires , then use the multi-meter Ω shelf to measure resistance between the blue wire (EV1) and white wire (IS). Open circuit and short circuit are both incorrect.
3. I f the measured resistance is not correct, it means the valve coil is broken or the connector is loose. In this case, we should check the connection first. If the problem hasn't been solved by re-connection, we should replace the safety hose.

Mechanical Aquastop Hose

Maybe moisture absorption of foaming material in mechanical device cause a self-lock fault(can't fill the water) and this lock is non-resettable.

Test Program

In order to check the operation of components of appliance and find out the malfunction, we designed this program for technician.

How to activate Test Program

Test Program Operation	
	B9227E
How to start Test Program	With door closed, Program + Power
Jump into next step	Program
E1	E1
E2	\
E3	E3
E4	E4
E6	E6
E7	E7

To activate test program, with the door closed and machine off, hold down the Program button and press the POWER button until the machine enter into Test Program. The appliance will pause and stand by(as step 00). Then press Program button to start the Test Program.

During test program running, you can press Program button to jump into next step（except inlet valve step）.

Note: The way to activate test program is slightly different between different models.

Procedure of Test Program (for models controlling water filling by flowmeter)			
No.	Display on the screen	Process	Description
0	8:88	Initialization	Power on, stand by
1	0A	Inlet Valve	Open inlet valve and feeds with 3.6L water.
2	09	Washing Pump and Dispenser	Dispenser will act once and washing pump will run for 60s in this step.
3	08/ tempera-ture value	Heating Element	Run washing pump and heating element until the water temperature reaches 57℃. Then the machine will pause. Press Program button to jump into the next step.
4	07	Drain Pump	Drain for 30s.
5	06	Pause	Pause for 10s.
6	05	Inlet Valve	Open inlet valve and feeds with 3.6L water
7	04	Washing Pump	Run washing pump for 2 mins.
8	03	Pause	Pause for 5s.
9	02	Washing pump	Run washing pump for 1 min.
10	01	Drain Pump and Regeneration Valve	Open regenaeration valve and drain for 30s.
11	F*	finish	Buzz one sound, stop, and stand by.

How to know which error code has occurred

To know which error code has occurred, refer to the previous table named Test Program Operation.
Take 9348 for example, If the error 1 has happened, the buzzer would alarm for 30 seconds and “E1” would be shown on display. Other error alarms would be shown in the same manner.
Take 9239D for example, if the error 7 has happened, the buzzer would alarm for 30 seconds and the Main, Rinse and Drying indicators would flash simultaneously. Other error alarms can be deduced from this.

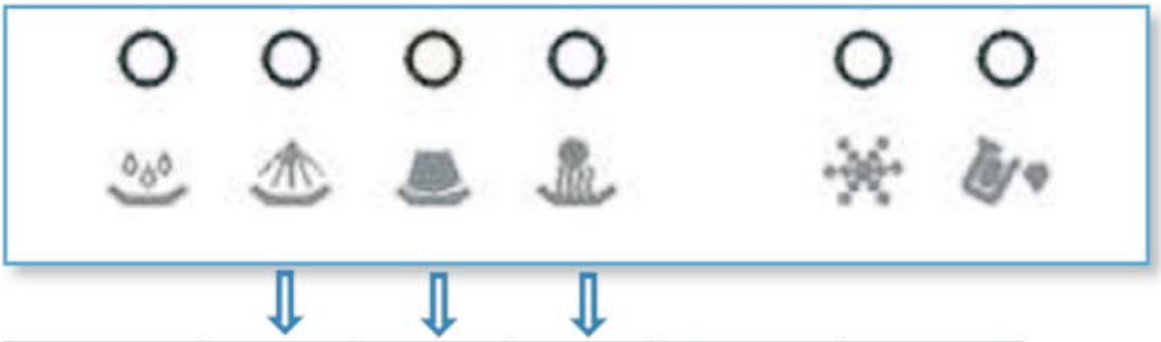

	Main	Rinse	Drying	binary numeral	decimal numeral
error 1	0	0	1	001	1
error 2	0	1	0	010	2
error 3	0	1	1	011	3
error 4	1	0	0	100	4
error 6	1	1	0	110	6
error 7	1	1	1	111	7

The corresponding relation between indicator combination and error code shown in above figure.
Notice: the majority of models are follow this regulation, but some special models is different.

Attention

Priority level of E4 is the highest. E4 operation is valid after other error operations have done. When E4 operation has done, all the others are invalid.

In test program, E1, E2,E3, E4, E6,E7 are valid.
Note: E2 is valid for models whose water filling be controlled by pressure switch(83/63).

How does the appliance react when error code occurred

E1 Water filling exceed pre-set time

For the models controlling water filling by flow meter.

If the inlet valve has been opened for 4 minutes but the water quantity hasn't reached the desired value(measure by pluses), E1 would occur.
When E1 occurs, the drain pump will run until flowmeter keep motionless for 2 minutes and all the other components will be stopped immediately. At the same time, the buzzer will alarm for 30 seconds and error 1 will be shown.

For the models controlling water filling by pressure switch.

If the inlet valve has been opened for 4 minutes but the pressure switch hasn't act, E1 would occur.
When E1 occurs, the appliance will active drain pump and stop all the other components immediately. At the same time, the buzzer will alarm for 30 seconds and error 1 will be shown. Then, drain pump will run till the pressure switch reset and continue draining for 60 seconds.

E2 Draining exceed pre-set time

Note: This error code is only for models controlling water filling by pressure switch(83/63).

If the drain pump has been running for 4 minutes but the water level pressure switch hasn't reset, E2 would occur.
When E2 occurs, drain pump will keep working for 2 minutes and appliance will stop all the other components immediately. At the same time, the buzzer will alarm for 30 seconds and error 2 will be shown.

E3 Heating exceed pre-set time

If the heating element has been working for 60 minutes but the water temperature detected by NTC hasn't reached desired value. E3 would occur.

When E3 occurs, the drain pump will run until flowmeter keep motionless for 2 minutes (if the model with the pressure switch (83/63),drain pump would run till the pressure switch reset and continue draining for 60 seconds.) and all the other components will be stopped immediately. At the same time, the buzzer will alarm for 30 seconds and the error 3 will be shown.

E4 Overflow

At any time, if overflow micro-switch act and keep for longer than 2 seconds, the E4 would occur. When E4 occurs, the drain pump will run until flowmeter keep motionless for 2 minutes (if the model with the pressure switch (83/63),drain pump would run till the pressure switch reset and continue draining for 60 seconds.) and all the other components will be stopped immediately. At the same time, the buzzer will alarm for 30 seconds and error 4 will be shown.

Note: Priority level of E4 is the highest. E4 operation is valid after other error operations have done. When E4 operation has done, all the others are invalid.

E6 Open-circuit failure of thermistor

In test program, once open-circuit failure of thermistor is detected by controller, the E6 would occur. When E6 occurs, the drain pump will run until flowmeter keep motionless for 2 minutes (if the model with the pressure switch (83/63),drain pump would run till the pressure switch reset and continue draining for 60 seconds.) and all the other components will be stopped immediately. At the same time, the buzzer will alarm for 30 seconds and error 6 will be shown.

E7 Short-circuit failure of thermistor

In test program, once short-circuit failure of thermistor is detected by controller, the E7 would occur. When E7 occurs, the drain pump will run until flowmeter keep motionless for 2 minutes (if the model with the pressure switch (83/63),drain pump would run till the pressure switch reset and continue draining for 60 seconds.) and all the other components will be stopped immediately. At the same time, the buzzer will alarm for 30 seconds and error 7 will be shown.

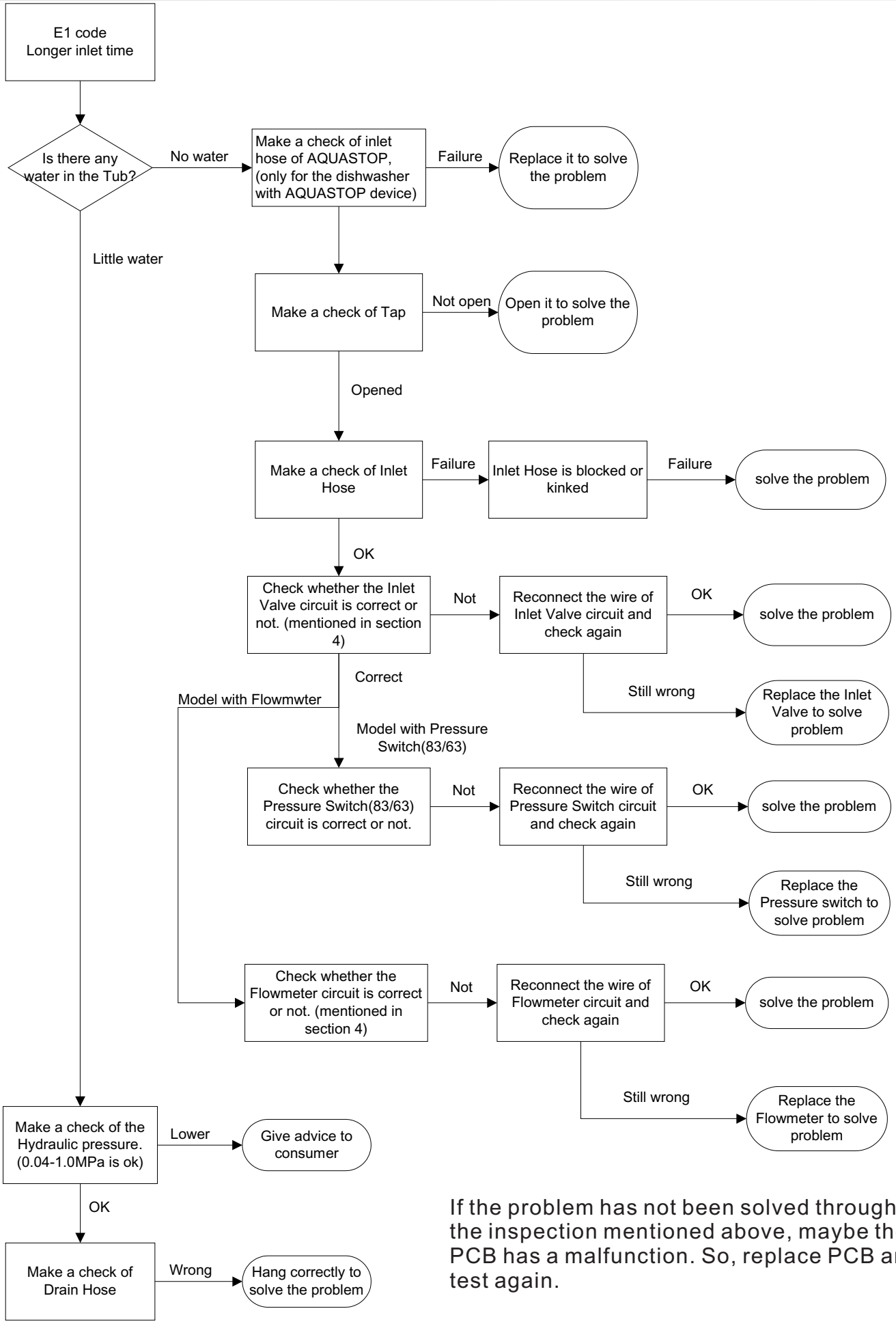

If the problem has not been solved through all the inspection mentioned above, maybe the PCB has a malfunction. So, replace PCB and test again.

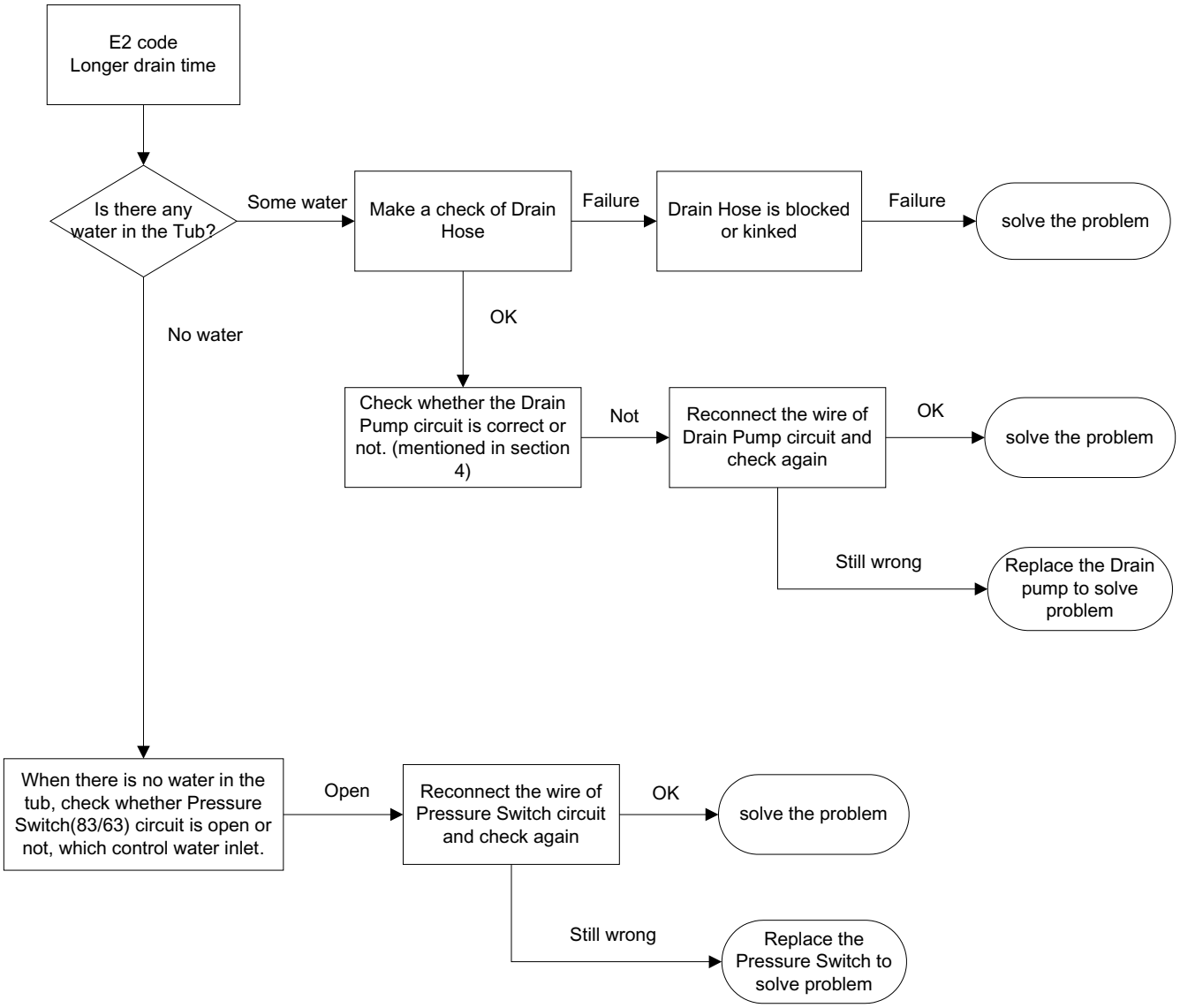

If the problem has not been solved through all the inspection mentioned above, maybe the PCB has a malfunction. So, replace PCB and test again.

Note: This error 2 is only for models whose water filling be controlled by pressure switch(83/63).

E3
Longer heating time
Check water temperature in the tub
Low
Make a check of over heat proof heating Micro-switch.
Failure
Replace Switch to solve the problem
OK
High
Check whether the filter is jammed severely or not
Jammed
Clear or replace filter to solve the problem
OK
Make a check of Heater. (mentioned in section 4)
Failure
Reconnect the wire of Heater circuit and check again
OK
solve the problem
Still wrong
Replace the Inlet Valve to solve problem
OK
Check whether the Washing Pump circuit is correct or not. (mentioned in section 4)
Not
Reconnect the wire of Washing Pump circuit and check again
OK
solve the problem
Still wrong
Replace the Washing Pump to solve problem
Check whether the NTC circuit is correct or not.(mentioned in section 4)
Not
Reconnect the wire of NTC circuit and check again
OK
solve the problem
Still wrong
Replace the NTC to solve problem

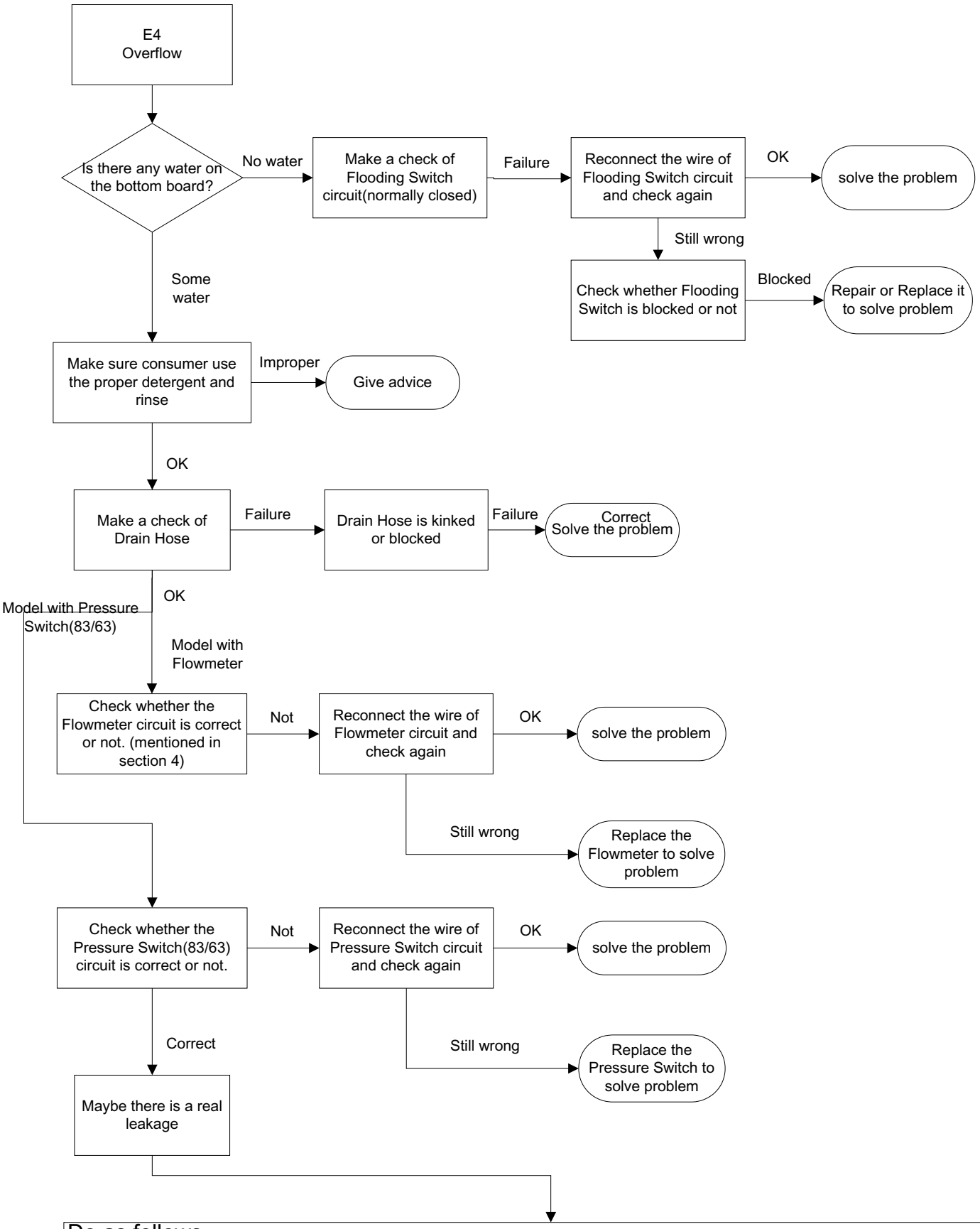

Do as follows

Remove two side panels
Remove the water from the bottom board and make sure there is no water at the bottom board.
Restart the dishwasher with a strong or standard wash program as a leakage could easily repeat at a higher temperature and after a long period of running time.
Observe the bottom tray every twenty minutes.
If any water appears, you will found out which areas, such as motor, drain pump, sump, softener, and hoses between them, and also clips at the end of each hose, besides the weld seam at the bottom of the tub.
If hours passed, but no water comes out, you should stop the dishwasher with sufficient water in the inner tub, and observe it again after leaving it alone for one to two hours.

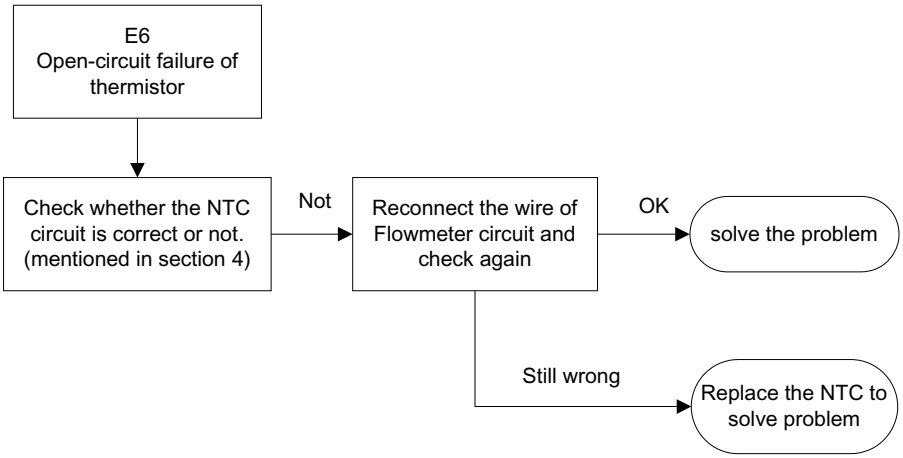

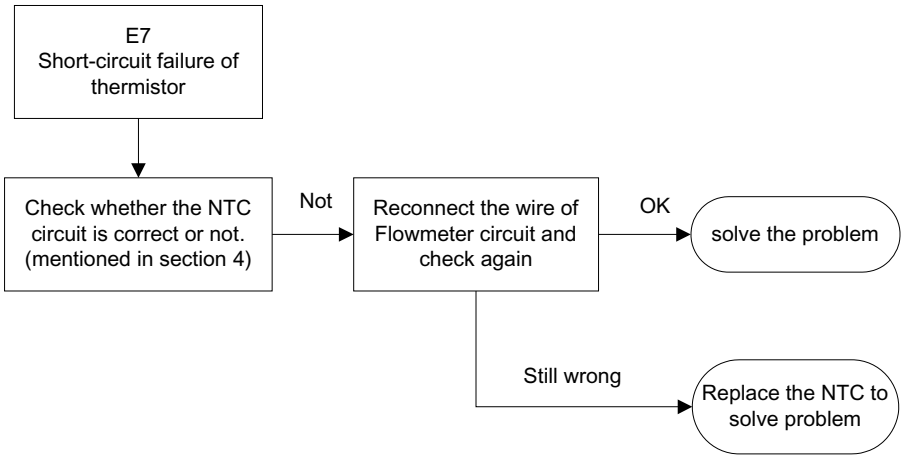

If the problem has not been solved through all the inspection mentioned above, maybe the PCB has a malfunction. So, replace PCB and test again.

Caution:

Because the real situation is unpredictable, inspection trees mentioned in this manual are for reference only.

symptom	possible reason	analysis	operation	remedy
E1 longer inlet time	check the AQUA STOP hose	defective AQUA STOP hose might cut off the water inlet route	for mechanical AQUA STOP hose, check whether the mechanical device is lock or not	replace the hose
			for electronic AQUA STOP hose, check whether the valve circuit is ok or not	reconnect or replace the hose
	check the water supply	the tap isn't open	check whether the tap open or not	give advice
		lower hydraulic pressure	make sure the hygraulic pressure in the range from 0.04 to 1.0 Mpa	give advice
	check the inlet	inlet hose is blocked or kinked	unblock or unkink	unblock or unkink
	check the inlet valve	loosing connection or defective inlet valve might cause the E1 alarm	check the circuit of inlet valve	reconnect or replace the valve
	check the flowmeter	for models with flowmeter, defective flowmeter might cause the E1 alarm	check the circuit of flowmeter	reconnect or replace flowmeter
	check the pressure switch (83/63)	for models controlling water filling by pressure switch, defective pressure switch might cause the E1 alarm	check the circuit of pressure switch	reconnect or replace the pressure swtich
	check the drain	wrong installation of drain hose might cause water siphon out	make sure it is intalled properly.(refer to instruction manual)	reinstall drain hose
	check the pressure switch (140/120)	defective pressure switch might cause the drain pump always run	listen the sound to check whether the drain pump is run or not	replace the pressure switch (140/120)
	check the PCB	defective PCB might cause the E1 alarm	When you have eliminated other possible causes, maybe there is something wrong with PCB	reconnect or replace PCB
E2 longer drain time	check the drain hose	blocked hose	unblock the hose	unblock the hose
	check the drain pump	defective drain pump	check the circuit of drain pump	reconnect or replace the drain pump
	check the pressure switch (83/63)	if there is no water in the tub and appliance still ste off E2 alarm, the possible reason is defective pressure switch	check the circuit of pressure switch	reconnect or replace the pressure switch

	check the PCB	defective PCB might cause E2 alarm	When you have eliminated other possible causes, maybe there is something wrong with PCB	reconnect or replace PCB
E3 heating fault	check filter	severely jammed filter might cause E3 alarm, so give advice to end customer on clean regularly the interior of dishwahser.	Advice: Even though a dishwasher is constantly being pounded with water and soap, it needs an occasional cleaning. Food particles, hard water deposits, mildew, mold and bacteria can and do build up along the surfaces and in the crevices of a dishwasher. Cleaning a dishwasher regularly will keep it functioning properly, keep your family healthy and safe, and keep your dishes coming out sparkling	clean the filter and give advice
	check the hydraulic pressure	low hydraulic pressure might cause the less filling water	make sure the hygraulic pressure in the range from 0.04 to 1.0 Mpa.	give advice
	check the drain hose	wrong installation of drain hose might cause water siphon out	make sure it is intalled properly.(refer to instruction manual)	reinstall drain hose
	check washing pump	washing pump doesn't running might cause E3 alarm	listen to the sound of appliance to see whether washing pump run or not. Defective motor might cause the washing	replace the washing pump
			measure the capacitance of starting capacitor. Capacitor attenuation could casue the motor cann't start	replace the capacitor
	check heater and NTC	malfunction of heater or NTC might cause E3 alarm	measure temperature of water in tub continuously when test program is running to see whether temperature increasing (aproximate 2 ℃/min) is normal and the applaince pause when the water temperature reach 60 degreee or not.	replace the defective component
	check anti-drying pressure switch	abnormal anti-drying pressure switch might cause E3 alarm	if haven't find the problem after checking the components mentioned above, it is most possible reason that anti-drying pressure switch is abnormal.	replace the anti-drying pressure switch
	check PCB	defective PCB also might cause E3 alarm, but its probability is small.	So, When you have eliminated other possible causes, you can try to change PCB to see if the problem be solved.	reconnect or replace PCB
	check the use of detergent	too much detergent used during the wash cycle could cause the water foams up and overflow on the bottom	give advice to end customer advice on use the amount of detergent used during the wash cycle according to instruction manual	give advice

E4 overflow	chech whether the applaince is level	if apliance is not level, it might cause the E4 alarm	make sure the appliance is level	level appliance
	check the drain pump	defective drain pump might cause the E4 alarm	the first step of all the washing program is drain, which could be used to test whether drain pump work noramlly or not	replace the drain pump
	check the amount of filling water	too much filling water could make a overflow	for models controlling water filling by pressure switch(83/63), run test program and check whether the amount of filling water is normal or not.	repalce the pressure switch(83/63)
			for models controlling water filling by flowmeter, run test program and check whether the amount of filling water is	replace the flowmeter
	check the float microswitch	sticking float microswitch could cause the E4 alarm	disassemble the bottom tray and check whether the float microswitch moves freely up and down	repair or replace the float microswitch
	find where leakage is	if there is a real leakage, finding where leakage is and solving the problem would be	to find and solve problem, do as suggestion mentioned in service manual	repair or replace the defective component
E6 & E7 open-circuit & short-circuit	check the NTC	if the appliance detect the malfunction of NTC themistor, E6 or E7 would be set off	check the NTC circuit and measure the resistance of NTC thermistor	reconnect or replace the NTC thermistor
	check the PCB	if the NTC thermistor is ok, but the alarm still be set off, the PCB might have defect	change the PCB to see if the appliance is run normally	reconnect or replace PCB
	check the loading	improper loading could block the spray arm, so give advice to end customer on how to load dishes and silverware peoperly.	following the advice on how to load mentioned in instruction manual, which is the necessary condition of getting good washing performance	give advice
	check filter	severely jammed filter might cause E3 alarm, so give advice to end customer on clean regularly the interior of dishwahser.	Advice: Even though a dishwasher is constantly being pounded with water and soap, it needs an occasional cleaning. Food particles, hard water deposits, mildew, mold and bacteria can and do build up along the surfaces and in the crevices of a dishwasher. Cleaning a dishwasher regularly will keep it functioning properly, keep your family healthy and safe, and keep your dishes coming out sparkling	clean the filter and give advice
	check the using program	improper program might cause poor performance		

poor washing performance	check the use of deterhent and rinse	improper amount of detergent and rinse aid and poor quality detergent and rinse aid might cause poor performance	refer to instruction manual	give advice
	check the setting of salt consumption	improper salt consumption might cause the poor perpormance	Observe whether there are water spots or white film on washed dishes and glass which caused by hard water mineral. If water is too hard, there is a need to adjust salt consumption to adopt to the situation.(refer to instruction	adjust salt consumption
	check dispenser	malfunction of dispenser might cause the poor performance	Run the test program to see whether dispenser open normally.	replace the dispenser
	check the water level	less water might cause the poor performance	make sure the aplliance is level	level appliance
			wrong installation of drain hose might cause water siphon out, so make sure it is intalled properly.(refer to instruction	reinstall drain hose
			low hydraulic pressure might cause the less filling water, so make sure the hygraulic pressure in the range from 0.04 to	give advice
			for models controlling water filling by flowmeter, defective flowmeter might cause less filling water. When you have eliminated other causes of less water, you could roughly judge the flowmeter is something wrong.	replace flowmeter
			for models controlling water filling by pressure switch(83/63), defective pressure switch might cause less filling water. When you have eliminated other causes of less water, you could roughly judge the pressure switch is something wrong.	replace pressure switch
			defective PCB also might cause less filling water, but its probability is small. So, the last choose is replace PCB.	replace PCB
	check heater and NTC	malfunction of heater or NTC might cause E3 alarm	measure temperature of water in tub continuously when test program is running to see whether temperature increasing (aproximate 2 ℃/min) is normal and the applaince pause when the water temperature reach 60 degreee or not.	replace the defective component
	check washing pump	washing pump not running	listen to the sound of appliance to see whether washing pump run or not	replace the washing pump

poor drying performance	check loading	improper loading might cause water remains on the dishes. Make sure tilt the dishes and load the glass bottom-side-up.	following the advice on how to load mentioned in instruction manual, which is the necessary condition of getting good drying performance	give advice
	check the using program	improper program might cause poor performance	refer to instruction manual	give advice
	check rinse aid dispenser	Rinse aid is formulated to ensure that food and chemical residues are not redeposited on your dishes during the final rinse cycle and dishwasher get expected drying performacne. Malfunction of dispenser might cause the rinse	make sure the rinse aid container is not empty and rinse aid is normally release in the cycle.	fill rinse aid or replace dispenser
	-	get better drying performance	The air drying process can be speeded up if you open the dishwasher just after it is finished and the dishes are still hot. This will allow the moist air to leave the dishwasher as the dishes cool and dry.	give advice
noise	check whether the noise is noraml	some audible sound are noraml	-	give advice
	check the loading	dishes are not secure in the rack or something small has dropped	ensure everything is secured in the dishwasher	reload and give advice
	check the washing pump	malfunction of washing pump might make a abnormal noise	chech the washing motor whether run normally	replace washing pump
	check the drain pump	blocked or defective drain pump might make a abnormal noise	chech the drain motor whether run correctly	replace drain pump